15 YEAR WARRANTY

Logis
Single lever shower mixer for concealed installation
Surfaces: **chrome** Article Number: **71606000**

Description

product features

- 1 outlet
- connection type: basic set
- scope of supply: handle, sleeve, escutcheon

Mandatory Accessoires

- Basic set for single lever shower mixer for concealed installation (#13620XXX)

Product image

Scale drawing

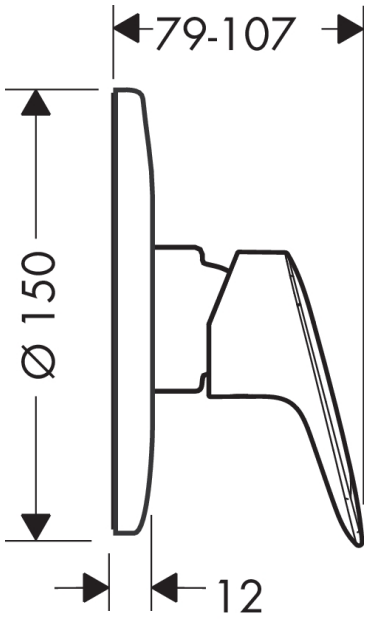
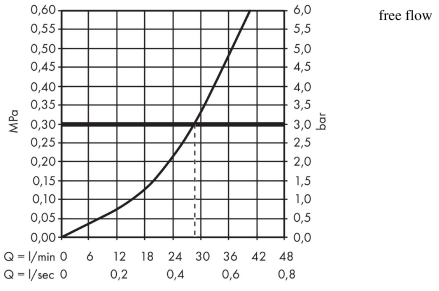
Flowchart