Villeroy & Boch
1748

AS 1428.1
Dimensional
Compliant

Architectura Wall Basin

TECHNICAL SPECIFICATIONS

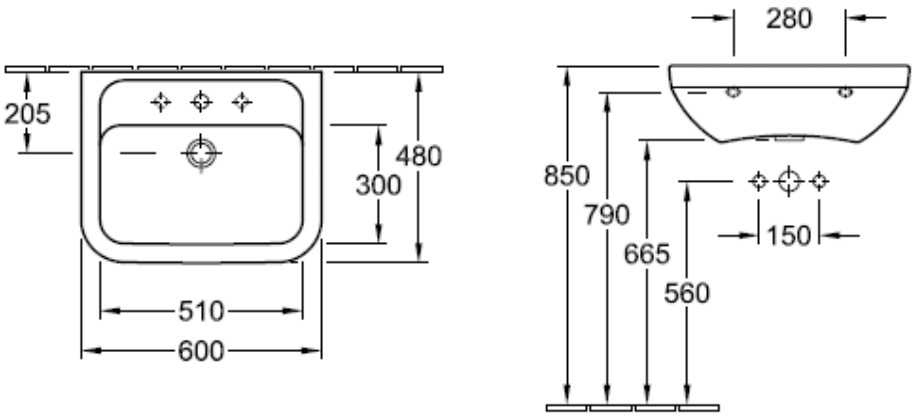

PRODUCT NO: **51756001CB**, Architectura Wall Basin – 1 Tap Hole
PRODUCT NO: **5175600301CB**, Architectura Wall Basin - 3 Tap Hole
PRODUCT NO: **51756001SDLCB**, Architectura Wall Basin with Soap Dispenser on Left Hand Side – 1TH
PRODUCT NO: **51756001SDRCB**, Architectura Wall Basin with Soap Dispenser on Right Hand Side-3TH

Recommended Overflow Waste 94238
-Mounting Bolts included