Isis Wall-Face Pan

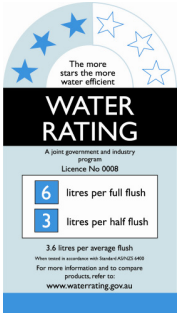

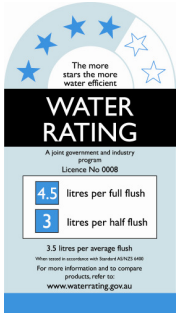

Suitable for 3 or 4 Star Grohe In-Wall flushing Systems

TECHNICAL SPECIFICATIONS

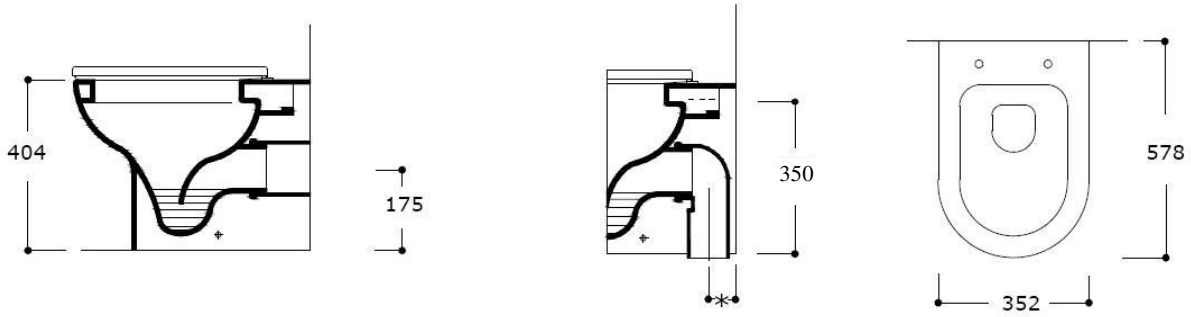

* Fixed set out 80 mm.

For use with Concealed Cistern

(Ask about Grohe In-Wall flushing systems)

PRODUCT NO: **KO04D1001S4B**, Isis Wall-Face Pan P-Trap, Includes Soft Close Seat
PRODUCT NO: **KO04D0101S4B**, Isis Wall-Face Pan S-Trap for fixed 80mm Set-out,Includes Soft Close Seat